ROHS

http://www.okhro.com

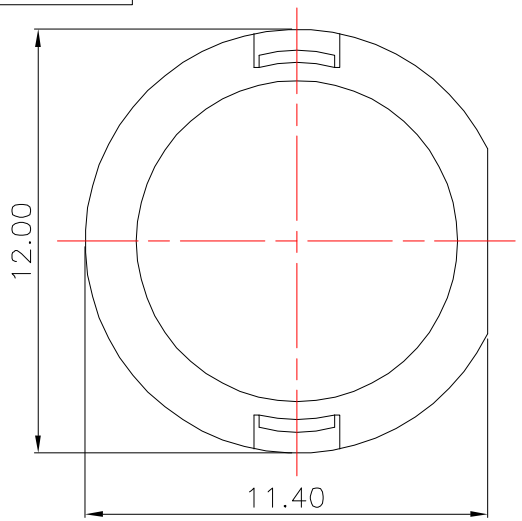

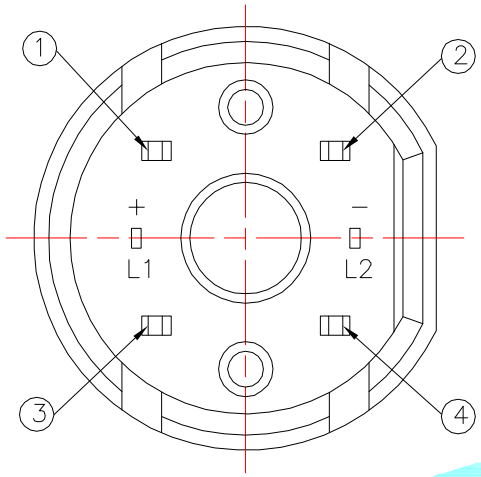

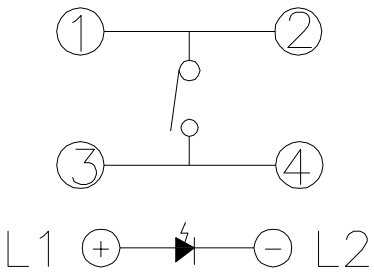

Circuit Diagram

LED colour(LED颜色)	Part No.（料号）
Whiler(白色)	K6−1207D01
Red(红色)	K6−1207D02
Blue(蓝色)	K6−1207D03
Green(绿色)	K6−1207D04

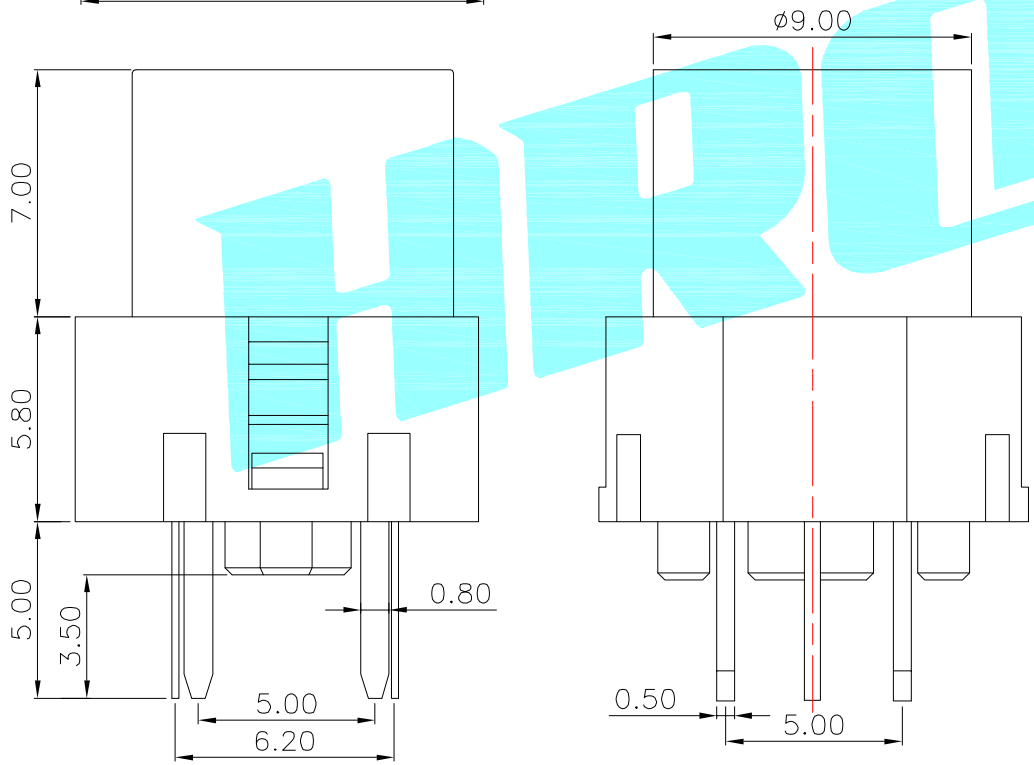

PCBLayout(Pattern Side)

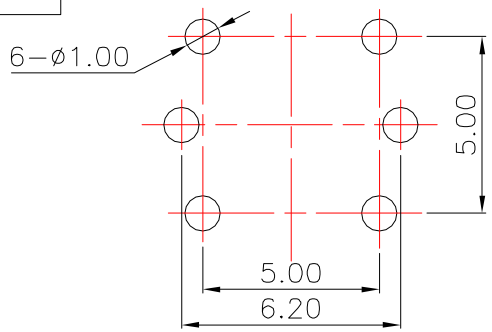

ITEM	PART NAME	TER'NO.	QTY.	MATERIAL	FINISHING	REMARK
②	Terminal	——	3	Phosphor bronze	Au Plating	——
①	Housing	——	1	Nylon	Black	——

APPROVALS		DATE
DRAWN	J.X.Zhang	2013/11/11
CHECKED		
APPROVALS		

HRO韩荣® ELECTRONICS CO.,LTD

TITLE: LED Tact Switch

PART NO. K6−1207D

TOLERANCES ARE			ANGLE	UNIT: mm	SCALE: 1:1	PROJ:
	30~以上	±0.30	±2°	DRAWING NO.	——	SHEET 1 OF 1
	10~30	±0.20				
	5~10	±0.15				
	~ 5	±0.10				

ECN NO.	REV.	DATE.	DESCRIPTION.	CHANGE.	CHECK.	APPRO.
——	A	——	NEW	——	——	——